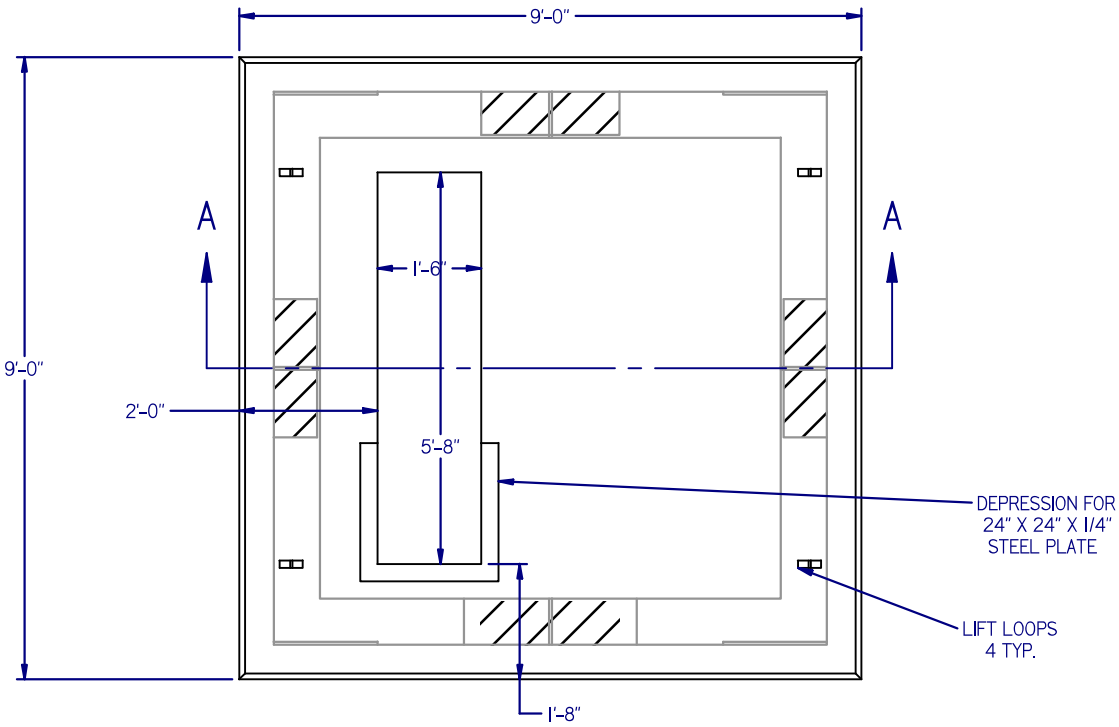

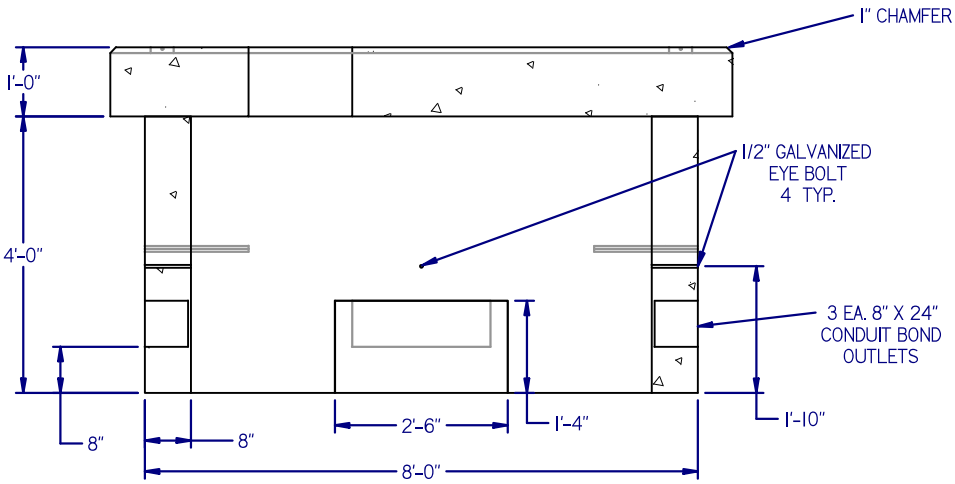

SECTION A-A

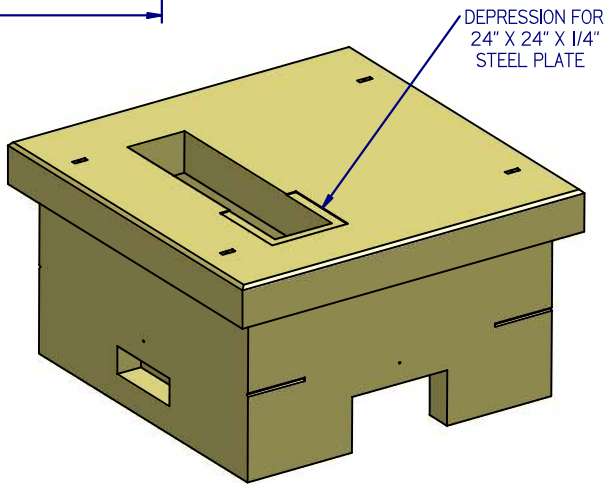

COMPONENT	WEIGHT (LBS)	APPLICATION CHART
BASE	15900	750 - 2000 KVA
COVER	10900	750 - 2000KVA

NOTES:

1. CONCRETE: 5000 PSI AFTER 28 DAYS
2. REINFORCING PER CMP SPECIFICATIONS
3. EXCAVATION MUST BE AT LEAST 12" WIDER AND LONGER THAN PAD SIZE

GENEST PRECAST
CONCRETE PRODUCTS

CMP 3 PHASE 9 X 9 TRANSFORMER PAD

238 Country Club Road (Route 4) Sanford, ME 04073

(207) 324-7215 (800) 477-8177 Date: **8/18/2025**